ContainerPower Energy Solutions

Huawei Swaziland outdoor power supply price

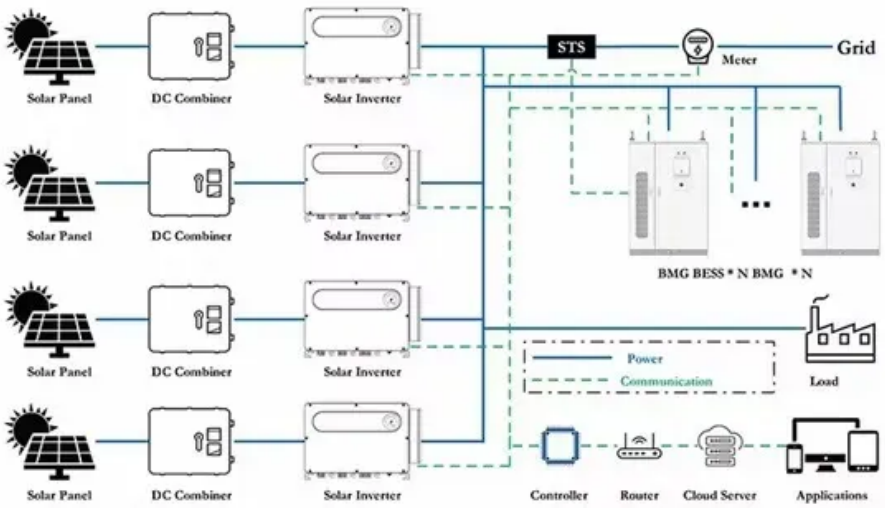

Overview

What are the key features of a 19V power supply?

This 19V power supply offers a powerful 19V with a maximum current of 3.42A. It also features a wide range input of 90-264 volts for world use.

What are the key features of a 19V power supply?

This 19V power supply offers a powerful 19V with a maximum current of 3.42A. It also features a wide range input of 90-264 volts for world use.

Where can I buy a 19 volt DC power supply?

19 Volt DC power supplies from leading power supply manufacturers. Hundreds of different 19 Volt models to choose from. Shop for a 19Vdc power supply on-line or call us for expert assistance at 1-888-612-9514. What are the key features of a 19V power.

NO. Intelligent telecom energy control and management software-Basic management software. Intelligent Distributed Power System Control and Management Software-Basic Management Software.

PSU (DPU60D-N06A1, 02313F PY) Functions: The PSU integrates power rectification, distribution, and monitoring. It converts AC into DC power and can report fault alarms and monitoring data to the upstream network management system (NMS). The PSU integrates power rectification, distribution, and.

We supply UPS power supplier and batteries of APC, Emerson, Santak, Panosonic, CSB, YUASA, LEOCH and etc. With high quality, favorable price, thinkful service, we are trying utmost to give you a pleasant and satisfactory experience of contacting with us. Our products has been shipped to Russian.

Huawei Outdoor Distributed Blade Power Supply DPU120D-N15A1 02312WUA The PSU integrates power rectification distribution, and monitoring. It converts AC into DC power and can report fault alarms and monitoring data to the

upstream network management system (NMS) or the app in real time. PSU.

Outdoor Power, TP48300A, 220/380Vac Three-Phase, 300A, 800mm (W) * 800mm (D) * 2030mm (H), Bottom Cabling, Direct Ventilation and DC Air Conditioner. Outdoor Power, MTS9514A, 220/380Vac Three-Phase or 220Vac Single-Phase, 400A, 750mm (W) * 750mm (D) * 2000mm (H), DC Air Conditioner. Outdoor Power.

Huawei Swaziland outdoor power supply price

Contact Us

For catalog requests, pricing, or partnerships, please visit:
https://www.websparafotografos.es